Front Hub

HB-QB400 For Disc Brake

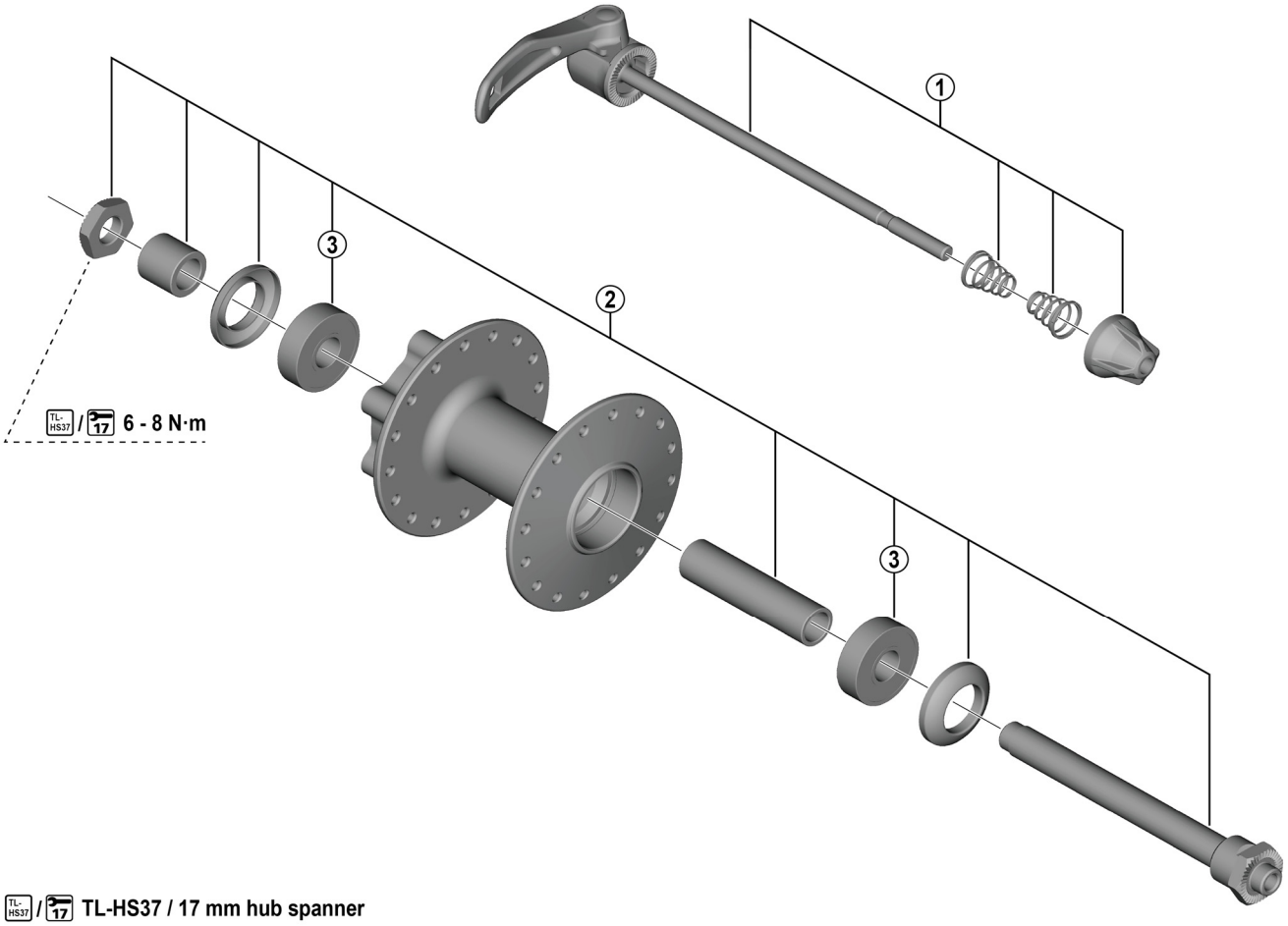

TL-HS37 / 17 TL-HS37 / 17 mm hub spanner

• **O.L.D. 100 mm**

ITEM NO.	SHIMANO CODE NO.	DESCRIPTION	INTERCHANGE-ABILITY HB-QB400		
1	**Y29C98010**	Complete quick release 133 mm	A		
2	**Y2KX98010**	Complete hub axle 108 mm	A		
3	**Y2KX9802T**	Sealed cartridge bearing (10 x 26 x 8)	A		

A: Same parts.

B: Parts are usable, but differ in materials, appearance, finish, size, etc.

Absence of mark indicates non-interchangeability.

Apr.-2024-5060

© Shimano Inc. I

Specifications are subject to change without notice.

Torque information is listed.

SHIMANO

quefairedemesdechets.fr